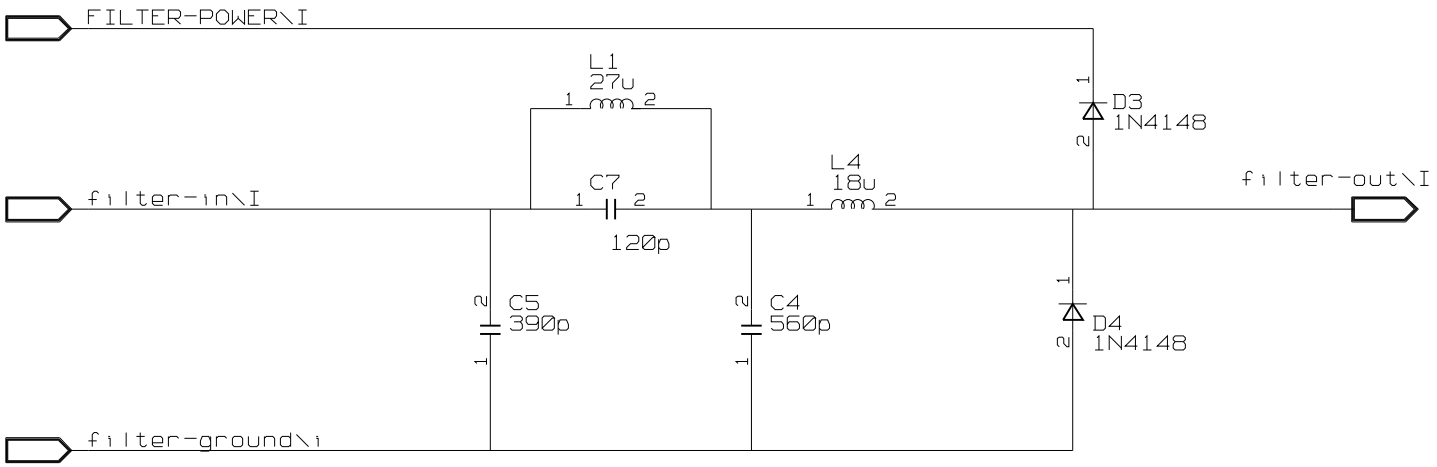

TITLE: LOW-PASS-FILTER3 DRAWING	DATE: Wed Jun 24 08:57:31 1992
ENGINEER: Ken Streeter Tom Toffoli	PAGE: