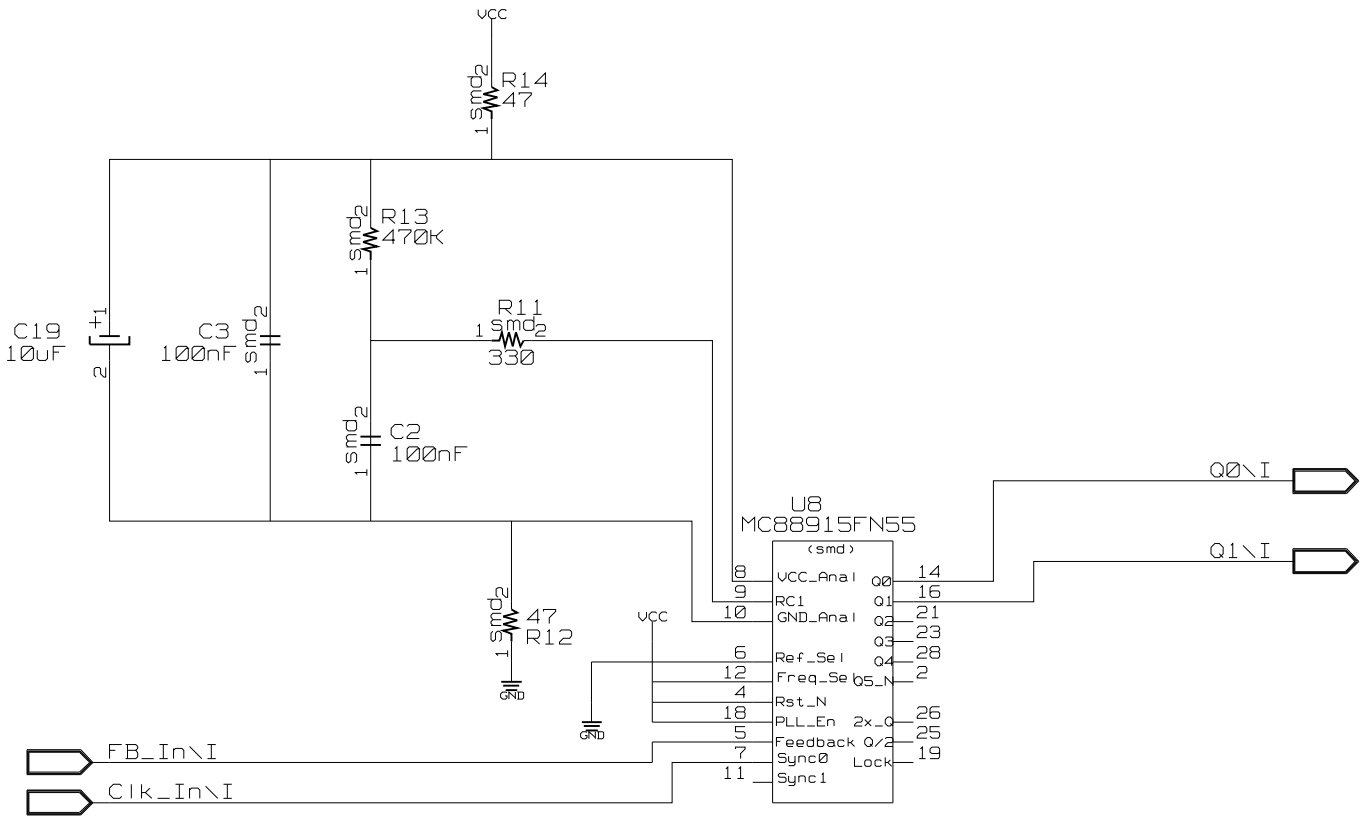

TITLE: MC-CLOCK DRAWING	DATE: Thu Feb 16 01:25:44 1995
ENGINEER: Ken Streeter, Tom Toffoli	PAGE: