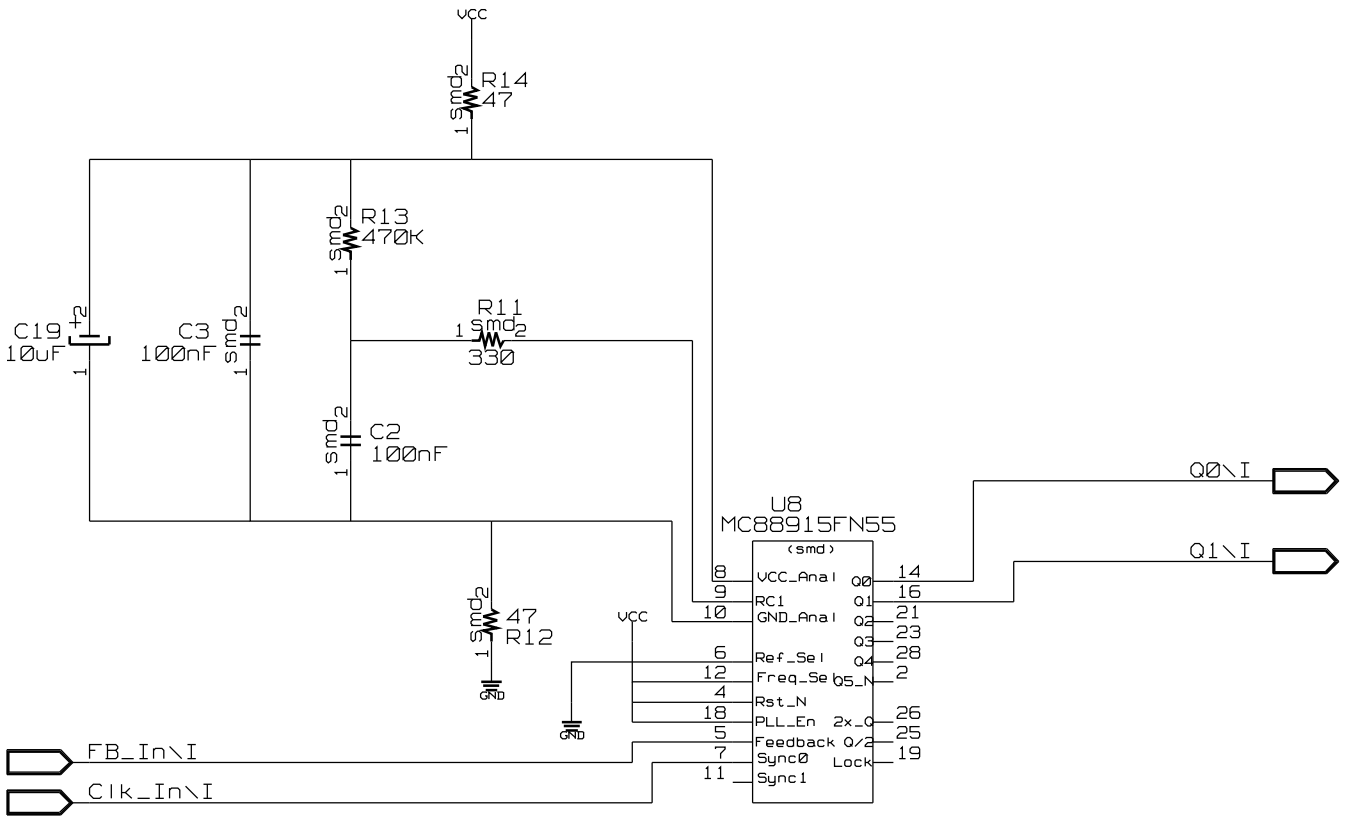


| TITLE: MC-CLOCK DRAWING | DATE: Sat Jul 10 10:28:52 1993 |
|---|---|
| ENGINEER: Ken Streeter, Tom Toffoli | PAGE: |