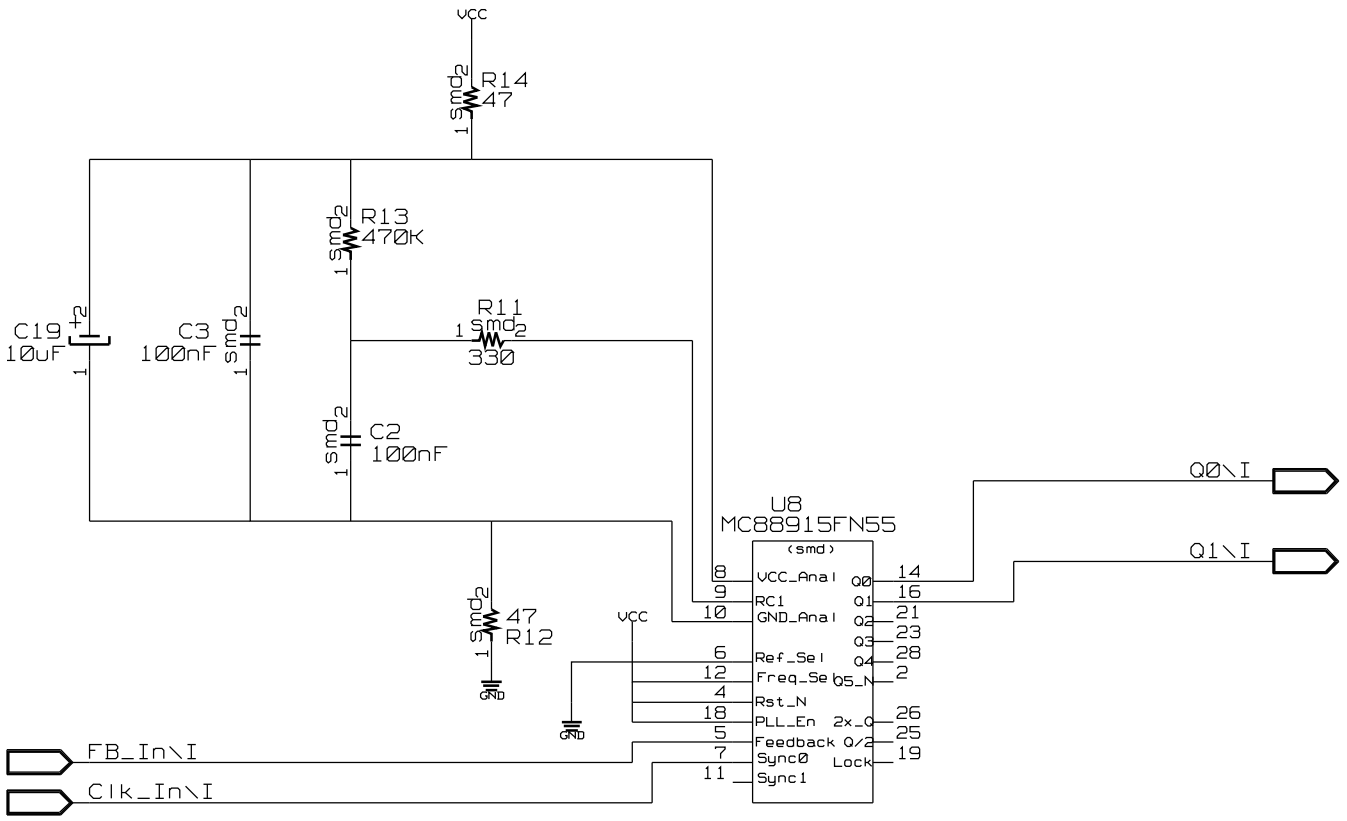

TITLE: MC-CLOCK DRAWING	DATE: Sun Oct 18 21:22:26 1992
ENGINEER: Ken Streeter, Tom Toffoli	PAGE: