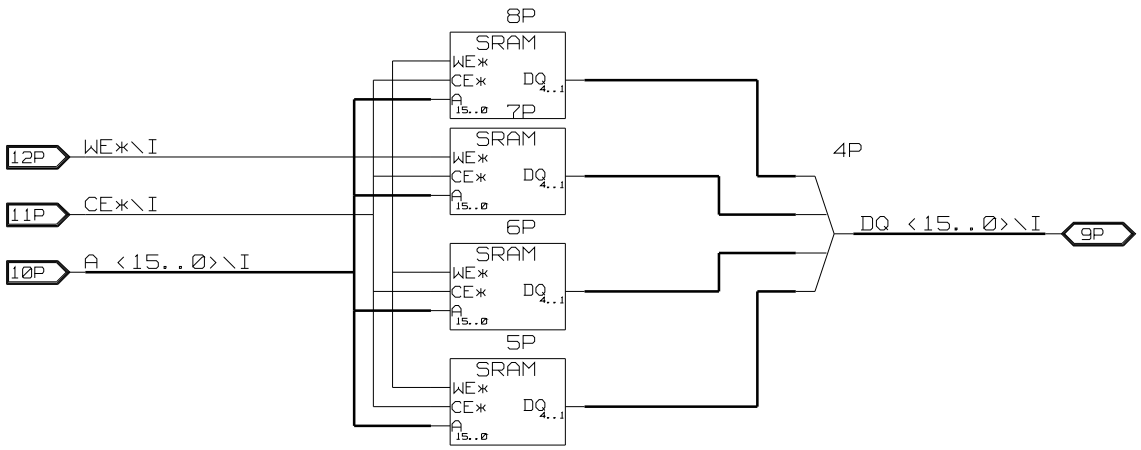

TITLE:	DATE:
SRAMMODULE	Fri May 24 14:44:33 1991
ENGINEER: Nate Osgood Kenneth Streeter	PAGE: DRAWING